REV	DATE	DESCRIPTION	DRN	APP

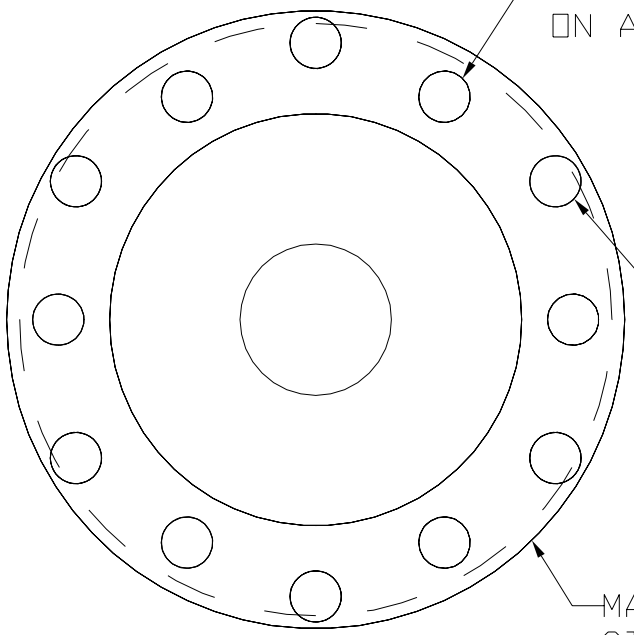

NOTES

THE NEW CV BOLTS MUST BE DRILLED AS ACCURATELY AS POSSIBLE, AS THEY LOCATE THE CV ON THE STUB AXLE (AS OPPOSED TO THE LIP LOCATING THE TYPE 1 CV).

DESIGN LOG No.

www.offroadvw.net

your source for vw related parts drawings

SCALE		DATE
DESIGNED	W TAYLOR	
DRAWN	W TAYLOR	21-9-01
CHECKED	B GIBBS	24-9-01
APPROVED		

TYPE 2 CV ON TO TYPE 1 STUB AXLE

DRAWING No. VW-001

REVISIONS